Low Power Digital Correlator System for PATH Mission

Pacific Microchip Corporation

PI: Denis Zelenin, Proposal#: S20.01-9951

OBJECTIVES

The primary objective of the Phase II project was to design, assemble and test the complete cross-correlator system consisting of 48 ASICs and meeting the requirements of the PATH mission. Phase II resulted in the complete system assembly, its characterization and validation – making it ready for application within the PATH mission. The following list shows the originally targeted features and parameters corresponding to the NASA's requirements for the PATH's digital cross-correlator system.

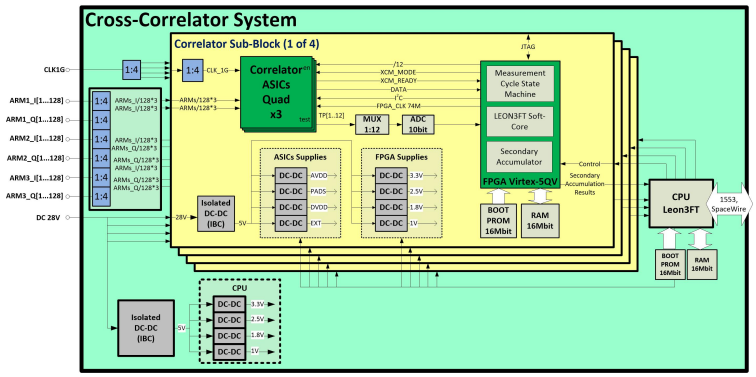

Cross-Correlator System

ACCOMPLISHMENTS

NOTABLE DELIVERABLES PROVIDED

-Correlator ASIC socketed test board design and their screening.
-Design and fabrication of system prototype board.
-System mechanical design, test plan and automation GUI preparation.
-Prototype system testing.
-Assembly and validation of complete prototype cross-correlator system.
-Project reporting.

KEY MILESTONES MET

During PhII, Pacific Microchip Corp. developed a socketed test board, a GUI and screened the required number of ASICs for the system. The cross-correlator boards and the signal distribution board were designed assembled and tested. After board modifications, a complete system was assembled and tested. Based on the testing results, it can be concluded that the system is functioning as expected despite multiple modifications and fixing that had to be introduced to achieve the required performance.

FUTURE PLANNED DEVELOPMENTS

PLANNED POST-PHASE II PARTNERS

Pacific Microchip Corp. has further strengthened its collaboration with JSC KMSD, which is an ASIC design services and IP provider. JSC KMSD has expressed a strong interest in being a commercial sponsor for the Phase IIE project in exchange for the rights to the compact correlator system's IP.

PLANNED/POSSIBLE MISSION INFUSION

The unique architecture of this system permits a relatively simple scaling down of the system in order to adopt it for less demanding applications. A compact variant of the system was proposed to be developed within the Phase IIE project.

PLANNED/POSSIBLE COMMERCIALIZATION

Pacific Microchip Corp. is involved in several activities aiming to find new customers for the developed cross-correlator system and the new compact cross-correlator system we expect to develop at the end of the Phase IIE project. We plan to present the cross-correlator system to potential customers at SpaceTech'18 expo in May 2018

CONTRACT (CENTER)	NNX15CP17C (JPL)	**SOLICITATION-PHASE**	SBIR Select 2014-II
SUBTOPIC	S20.01 Array Technologies for Microwave Remote	**TA**	8.3.4 Other

TRL 1 | 2 | 3 | 4 | 5 | 6 | 7 | 8 | 9

IN OUT

SBIR / STTR
Small Business Innovation Research / Small Business Technology Transfer