Mini-Advanced Pointing Imaging Camera (mAPIC)

Completed Technology Project (2016 - 2019)

Project Introduction

A high-resolution imaging system which simultaneously takes images of target and star field with two-axis control capability, allowing rapid target imaging with extremely precise pointing knowledge. Such imaging data can accurately measure the geophysical property and high-resolution topography of target objects.

Mini-Advanced Pointing Imaging Camera (mAPIC) is an imaging system with a high-resolution narrow-angle camera and an independent star camera configured into an approximately 2-U configuration. The system would provide important unique science return via the ability to simultaneously take the images of target body and star field, allowing high-resolution surface imaging with accurate pointing information. The two-axis control capability would dramatically reduce the operational load of remote sensing, and its compact size makes it ideal to be integrated into, but not limited to, small satellites. The combined functionalities of mAPIC would offer powerful gravity science and optical navigation capability that would significantly enhance spacecraft orbit reconstruction and prediction accuracy, and thus, enhance the quality of science products and reduce mission operations cost.

Anticipated Benefits

A high-resolution imaging system with accurate pointing information and flexible control capability would significantly improve the measurements of target body's geophysical properties, such as rotational state and surface topography. The technology would also improve the accuracy of spacecraft orbit through optical navigation, which would benefit onboard instruments.

This instrument/technology would benefit almost all missions to planetary bodies, including missions to Jovian satellites (e.g., Europa and Io), asteroids and comets.

Important areas of space-industry activity include asteroid prospecting missions. The mAPIC instrument is potentially very valuable for such missions.

Other US agencies that require small, high-powered optical instruments that are additionally gimbaled, for example to aid reconnaisance activities, could use these capabilities.

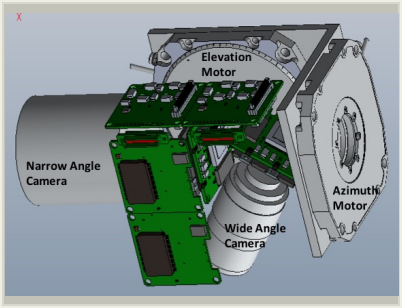

Shape, form and size pre-breadboard mock-up of mAPIC, showing the innovative design of the folded refractive optics of the 350 mm telescope. This science imager has superior performance than the MRO Optical Navigation Camera.

Table of Contents

Project Introduction 1
Anticipated Benefits 1
Primary U.S. Work Locations and Key Partners 2
Organizational Responsibility 2
Project Management 2
Images 3
Technology Maturity (TRL) 3
Technology Areas 3
Target Destination 3
Supported Mission Type 3

Primary U.S. Work Locations and Key Partners

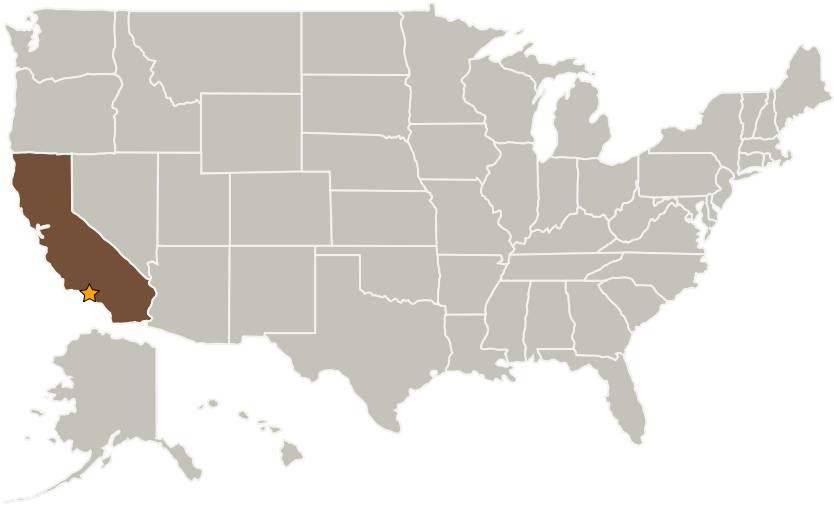

Organizations Performing Work	Role	Type	Location
★Jet Propulsion Laboratory(JPL)	Lead Organization	NASA Center	Pasadena, California

Primary U.S. Work Locations
California

Organizational Responsibility

Responsible Mission Directorate:

Mission Support Directorate (MSD)

Lead Center / Facility:

Jet Propulsion Laboratory (JPL)

Responsible Program:

Center Independent Research & Development: JPL IRAD

Project Management

Program Manager:

Fred Y Hadaegh

Project Manager:

Fred Y Hadaegh

Principal Investigator:

Ryan Park

Co-Investigators:

Mohamed M Abid
Justin S Boland
Joseph E Riedel

Images

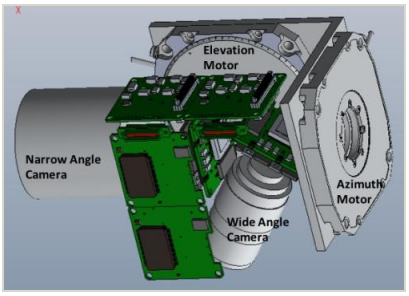

JPL_IRAD_Activities Project Image
Shape, form and size pre-breadboard mock-up of mAPIC, showing the innovative design of the folded refractive optics of the 350 mm telescope. This science imager has superior performance than the MRO Optical Navigation Camera.
(https://techport.nasa.gov/image/28012)

Technology Maturity (TRL)

Start: **4**
Current: **4**
Estimated End: **6**

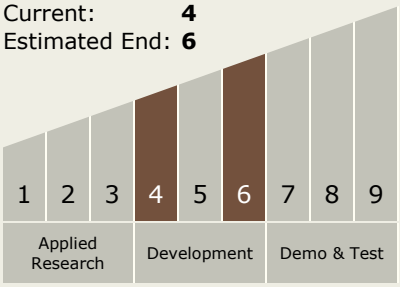

Technology Areas

Primary:

- TX17 Guidance, Navigation, and Control (GN&C)
  └ TX17.2 Navigation Technologies
    └ TX17.2.1 Onboard Navigation Algorithms

Target Destination

Others Inside the Solar System

Supported Mission Type

Push