Surface Abrasion Tool, Phase I

Completed Technology Project (2013 - 2013)

Project Introduction

The Mars Program Planning Group (MPPG) Final Report reiterates the importance of planetary sample return stating that sample return architectures provide a promising intersection of objectives for long term collaborations. The proposed innovation is an enabling technology for robotic planetary sample return missions. The proposed concept is a passive mechanism that works within a larger sample drilling system. Bear developed a complete planetary sample acquisition system called the Universal Sampling System (USS) which includes the baseline drill with Non-Rotating Technology (NRT Coring Drill) which was funded under a SBIR Phase 2 contract. Bear has several concepts for creating additional capabilities among them is the proposed Surface Abrasion Tool (SAT). The proposed innovation is a critical system component for meeting the science objectives of planetary sample return. Bear proposes to research and advance a Rock Abrasion (MER Rovers) like tool that can attach to and is driven by an existing coring drill thus requiring no additional motors. The proposed innovation has broad significance for the exploration of planets and small bodies. The proposed project is directly relevant to the topic as it addresses the importance of technologies for robotic mobility, manipulation, and sampling for in-situ analysis or return to earth from planetary small bodies, including Mars, Venus, comets, asteroids, and planetary Moons. Two main goals of the research are to: 1. Develop a method for attaching the surface abrasion tool to the larger coring drill without additional motors or wires. 2. Research the possible benefits/tradeoffs of cutting rather than grinding to remove rock surface with power constraints. Regardless of which technique is used to prepare the surface (cutting or grinding), the passive tool will strive to reduce the time it takes to prepare rock surfaces versus state of the art.

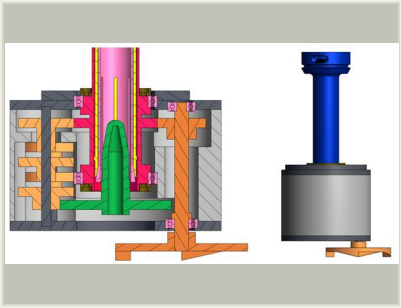

Surface Abrasion Tool, Phase I

Table of Contents

Project Introduction	1
Primary U.S. Work Locations and Key Partners	2
Project Transitions	2
Organizational Responsibility	2
Project Management	2
Technology Maturity (TRL)	2
Images	3
Technology Areas	3
Target Destinations	3

Surface Abrasion Tool, Phase I

Completed Technology Project (2013 - 2013)

Primary U.S. Work Locations and Key Partners

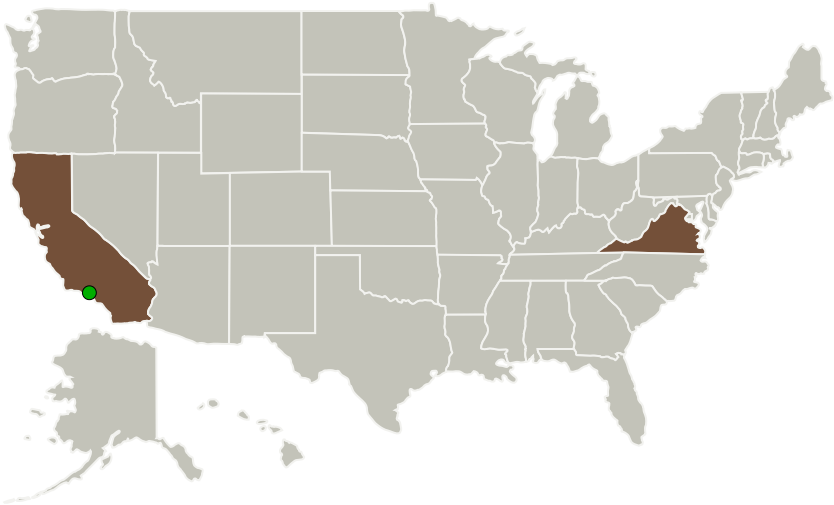

Organizations Performing Work	Role	Type	Location
Bear Technologies, LLC	Lead Organization	Industry Small Disadvantaged Business (SDB)	Oilville, Virginia
Jet Propulsion Laboratory(JPL)	Supporting Organization	NASA Center	Pasadena, California

Primary U.S. Work Locations	
California	Virginia

Project Transitions

May 2013: Project Start

November 2013: Closed out

Closeout Summary: Surface Abrasion Tool, Phase I Project Image

Closeout Documentation:
- Final Summary Chart Image*(https://techport.nasa.gov/file/137338)*

Organizational Responsibility

Responsible Mission Directorate:

Space Technology Mission Directorate (STMD)

Lead Organization:

Bear Technologies, LLC

Responsible Program:

Small Business Innovation Research/Small Business Tech Transfer

Project Management

Program Director:

Jason L Kessler

Program Manager:

Carlos Torrez

Principal Investigator:

Tom Myrick

Technology Maturity (TRL)

Start: **1**
Current: **4**
Estimated End: **4**

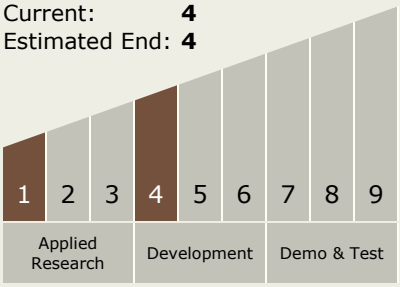

Images

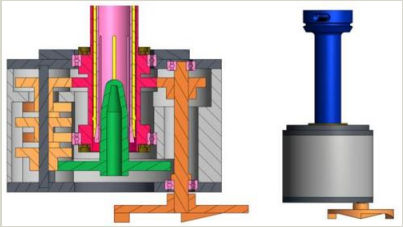

Briefing Chart Image
Surface Abrasion Tool, Phase I
(https://techport.nasa.gov/image/135439)

Technology Areas

Primary:

- TX08 Sensors and Instruments
  └ TX08.3 In-Situ Instruments and Sensors
    └ TX08.3.3 Sample Handling

Target Destinations

The Sun, Earth, The Moon, Mars, Others Inside the Solar System, Outside the Solar System